BALDOR® • RELIANCE

Product Information Packet

L1317-50

2HP,2850RPM,1PH,50HZ,56,3532L,OPEN,F1

Copyright © All product information within this document is subject to ABB Motors and Mechanical Inc. copyright © protection, unless otherwise noted.

Part Detail

Revision:	S	**Status:**	PRD/A	**Change #:**		**Proprietary:**	No
Type:	AC	**Elec. Spec:**	35WGY999	**CD Diagram:**	CD0001	**Mfg Plant:**	
Mech. Spec:	35T947	**Layout:**	35LYT947	**Poles:**	02	**Created Date:**	06-22-2007
Base:	RG	**Eff. Date:**	05-30-2018	**Leads:**	4#14 A PH,2#18 B PH		

Specs

Catalog Number:	L1317-50	**Insulation Class:**	B
Enclosure:	OPEN	**Inverter Code:**	Not Inverter
Frame:	56	**KVA Code:**	F
Frame Material:	Steel	**Lifting Lugs:**	No Lifting Lugs
Output @ Frequency:	2.000 HP @ 50 HZ	**Locked Bearing Indicator:**	No Locked Bearing
Synchronous Speed @ Frequency:	3000 RPM @ 50 HZ	**Motor Lead Quantity/Wire Size:**	4 @ 14 AWG, A PH
Voltage @ Frequency:	220.0 V @ 50 HZ	**Motor Lead Exit:**	Ko Box
	110.0 V @ 50 HZ	**Motor Lead Termination:**	Flying Leads
XP Class and Group:	None	**Motor Type:**	3532L
XP Division:	Not Applicable	**Mounting Arrangement:**	F1
Agency Approvals:	UR	**Power Factor:**	84
	WEEE	**Product Family:**	General Purpose
	CSA	**Pulley End Bearing Type:**	Ball
	CE	**Pulley Face Code:**	Standard
Auxillary Box:	No Auxillary Box	**Pulley Shaft Indicator:**	Standard
Auxillary Box Lead Termination:	None	**Rodent Screen:**	None
Base Indicator:	Rigid	**RoHS Status:**	ROHS COMPLIANT
Bearing Grease Type:	Polyrex EM (-20F +300F)	**Shaft Extension Location:**	Pulley End

Blower:	None	**Shaft Ground Indicator:**	No Shaft Grounding
Current @ Voltage:	12.000 A @ 220.0 V	**Shaft Rotation:**	Reversible
	24.000 A @ 110.0 V	**Shaft Slinger Indicator:**	No Slinger
Design Code:	L	**Speed Code:**	Single Speed
Drip Cover:	No Drip Cover	**Motor Standards:**	NEMA
Duty Rating:	CONT	**Starting Method:**	Direct on line
Electrically Isolated Bearing:	Not Electrically Isolated	**Thermal Device - Bearing:**	NONE (OLD)
Feedback Device:	NO FEEDBACK	**Thermal Device - Winding:**	None
Front Face Code:	Standard	**Vibration Sensor Indicator:**	No Vibration Sensor
Front Shaft Indicator:	None	**Winding Thermal 1:**	None
Heater Indicator:	No Heater	**Winding Thermal 2:**	None

Nameplate NP1372L

CAT.NO.	L1317-50								
SPEC.	35T947Y999G1								
HP	2								
VOLTS	110/220								
AMP	24/12								
RPM	2850								
FRAME	56		HZ	50				PH	1
SER.F.	1.15	CODE	F		DES	L	CL	B	
NEMA-NOM-EFF	70	PF	84						
RATING	40C AMB-CONT								
CC					USABLE AT 208V				
DE	6205		ODE	6203					
ENCL	OPEN	SN							
	IP23								

Parts List

Part Number	Description	Quantity
SA109233	SA 35T947Y999G1	1.000 EA
RA100728	RA 35T947Y999G1	1.000 EA
EC1645A06SP	ELEC CAP, 645-774 MFD, 125V, 2.06D X 4.	1.000 EA
NS2512A01	INSULATOR, CONDUIT BOX X	1.000 EA
35CB3007	35 CB CASTING W/.88 DIA. LEAD HOLE	1.000 EA
51XB1016A07	10-16 X 7/16 HXWSSLD SERTYB	2.000 EA
11XW1032G06	10-32 X .38, TAPTITE II, HEX WSHR SLTD U	1.000 EA
35EP3209G00	MASTER ODE,203 BRG	1.000 EA
51XW0832A07	8-32 X .44, TAPTITE II, HEX WSHR SLTD SE	2.000 EA
51XB1016A05	10-16X5/16HX WA SL SR TYB (F/S)	2.000 EA
HW5100A03	WAVY WASHER (W1543-017)	1.000 EA
35EP3210B00	MASTER DE,205 BRG,1.000SH	1.000 EA
XY1032A02	10-32 HEX NUT DIRECTIONAL SERRATION	4.000 EA
35CB4521	35 LIPPED CB LID (GALV & PHOSPH)	1.000 EA
51XW0832A07	8-32 X .44, TAPTITE II, HEX WSHR SLTD SE	4.000 EA
HW2501D13	KEY, 3/16 SQ X 1.375	1.000 EA
HA7000A04	KEY RETAINER 0.625 DIA SHAFTS	1.000 EA
85XU0407S04	4X1/4 U DRIVE PIN STAINLESS	2.000 EA
SP1006A01	TERM. BOARD, MODE 35 SW X H-23655	1.000 EA
WD1000A15	3-520132-2 AMP FLAG (4M/RL NON-CANC/NON-	2.000 EA
MJ1000A02	GREASE, POLYREX EM EXXON (USe 4824-15A)	0.050 LB
MG1000G27	MED CHARCOAL METALLIC GREY 400-0096	0.017 GA
SP5055A67	MODEL 35 TYPE L STATIONARY SWITCH	1.000 EA
HA3100A22	THRUBOLT 10-32 X 10.125	4.000 EA

Parts List (continued)

Part Number	Description	Quantity
LB1119N	WARNING LABEL	1.000 EA
LC0001	CONN LABEL TYPE L, 6 LEAD, DUAL VOLTS, R	1.000 EA
NP1372L	ALUM UL CSA CE CC	1.000 EA
35CB4802A02SP	CAPACITOR COVER, STAMPED X	1.000 EA
35PA1066	PKG GRP, PRINT PK1008A06	1.000 EA
PE-0000001	ZRTG PE ASSEMBLY	1.000 EA
FE-0000001	ZRTG FE ASSEMBLY	1.000 EA
MN416A01	TAG-INSTAL-MAINT no wire (1200/bx) 5/18	1.000 EA

Accessories

Part Number	Description	Multiplier
35-8764	C FACE KIT	A8
35EP1604A01SP	D-FLANGE KIT	A8

AC Induction Motor Performance Data

Record # 10396 - Typical performance - not guaranteed values

Winding: 35WGY999-R001	**Type:** 3532L	**Enclosure:** OPEN

Nameplate Data				220 V, 51 Hz: High Voltage Connection	
Rated Output (HP)	2			Full Load Torque	3.6 LB-FT
Volts	110/220			Start Configuration	direct on line
Full Load Amps	24/12			Breakdown Torque	8.8 LB-FT
R.P.M.	2850			Pull-up Torque	7.6 LB-FT
Hz	50	Phase	1	Locked-rotor Torque	9.4 LB-FT
NEMA Design Code	L	KVA Code	F	Starting Current	50.6 A
Service Factor (S.F.)	1			No-load Current	4.95 A
NEMA Nom. Eff.	70	Power Factor	84	Line-line Res. @ 25ºC	1.03 Ω A Ph 1.54 Ω B Ph
Rating - Duty	40C AMB-CONT			Temp. Rise @ Rated Load	79°C

Load Characteristics 220 V, 51 Hz, 2 HP

% of Rated Load	25	50	75	100	125
Power Factor	53	69	79	84	86
Efficiency	69	75	74	70	64
Speed	3021	2986	2935	2890	2805
Line amperes	5.9	7.3	9.4	12	15.5

Performance Graph at 220V, 51Hz, 2.0HP Typical performance - Not guaranteed values

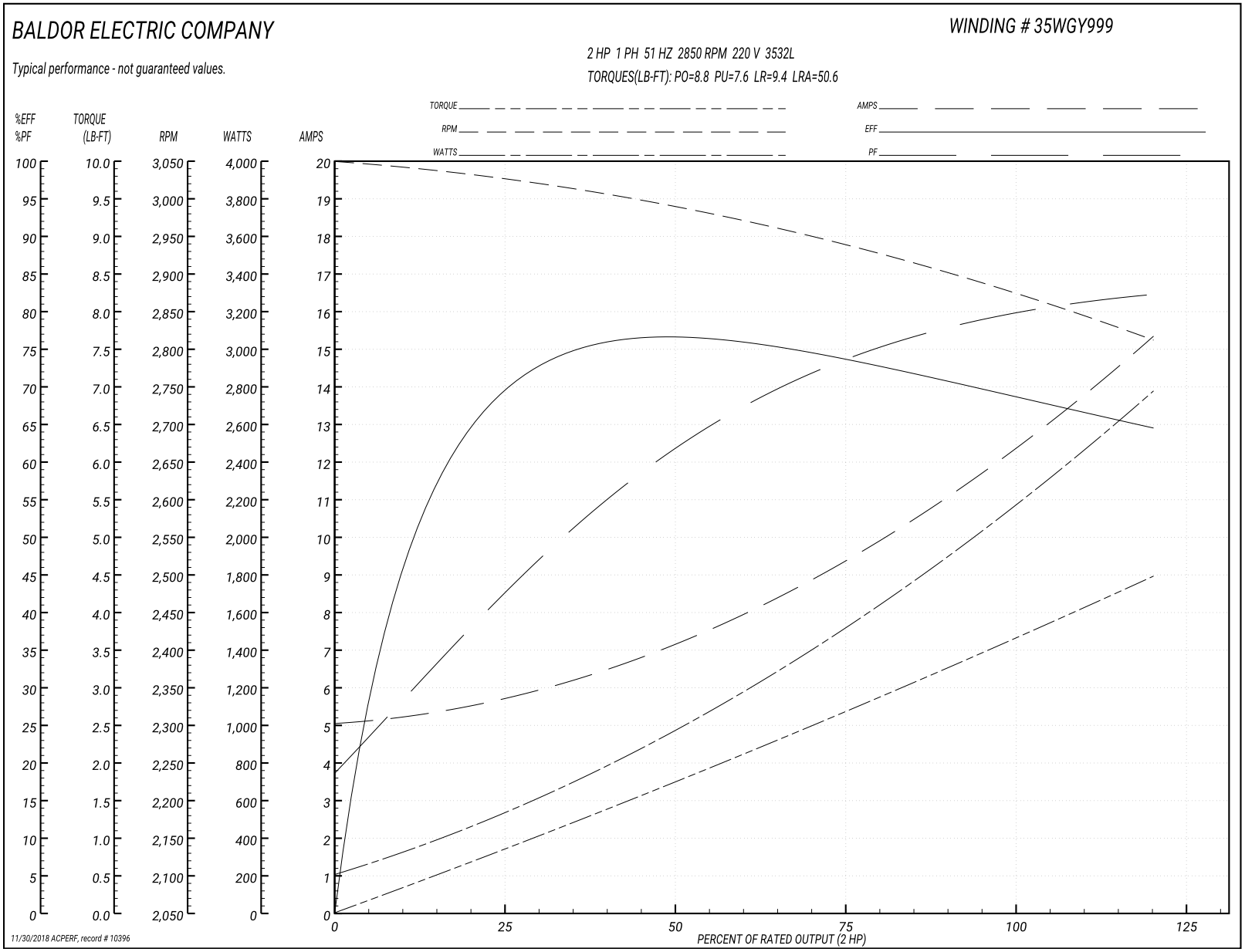

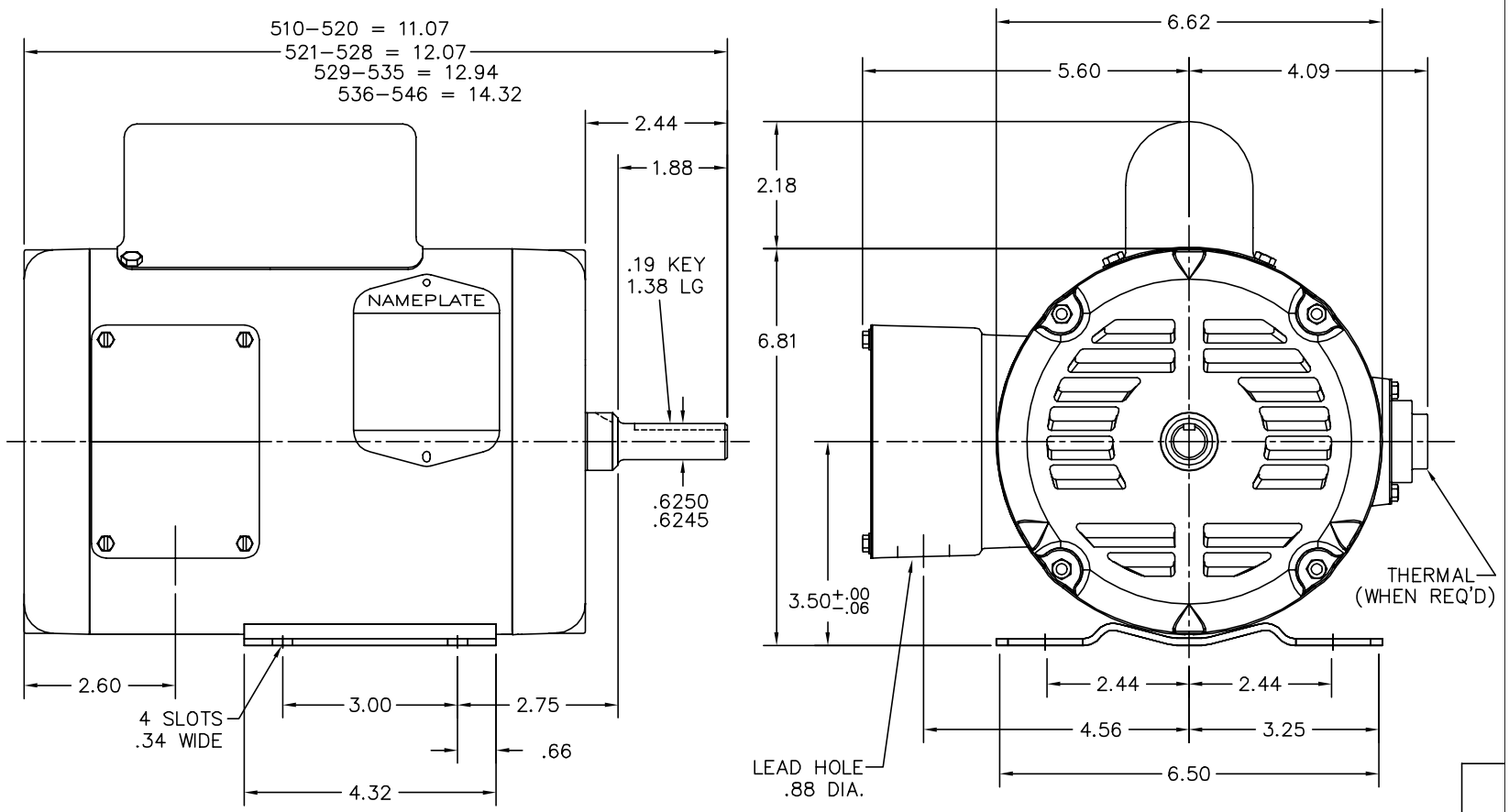

CUSTOMER IS RESPONSIBLE FOR DETERMINING THAT BALDOR'S PRODUCT WILL PERFORM SUITABLY IN THE INTENDED APPLICATION.

REV. DESC: REPLACE ENDPLATES		
REV. LTR: A	VERSION: 01	TDR: 000001041474
FILE: \AAA\00111\245	REVISED: 03:54:24 08/29/2017	BY: USJOBUR22
MTL: –		

BALDOR

STD HORZ 56 OPEN MODEL 35L, 2 POLE "W" BASE (35BA4010)

SH 1 of 1

35LYT947

CD0001

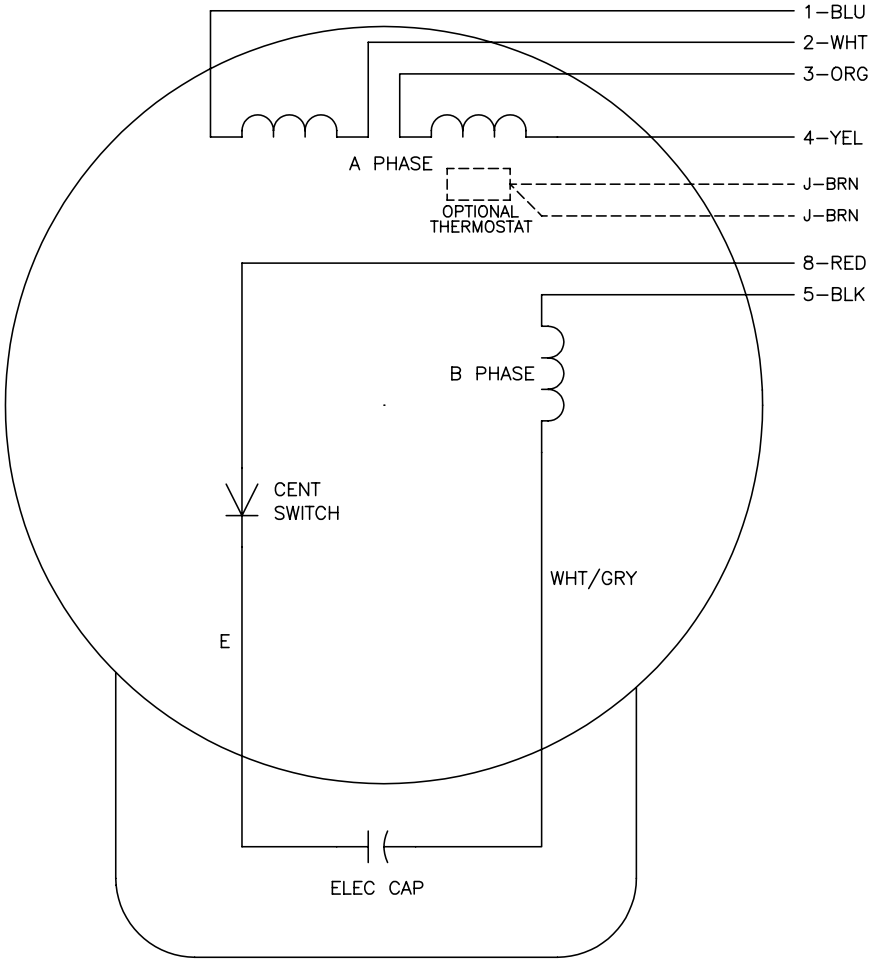

	LINE A	LINE B	JOIN
HIGH STD	1	4,5	2,3,8
HIGH OPP	1	4,8	2,3,5
LOW STD	1,3,8	2,4,5	–
LOW OPP	1,3,5	2,4,8	–

NOTES:

1. STANDARD ROTATION IS CCW FACING END OPPOSITE SHAFT EXTENSION.
2. OPTIONAL THERMOSTAT IS PROVIDED WHEN SPECIFIED.
3. MULTIPLE CAPACITORS ARE CONNECTED IN PARALLEL UNLESS OTHERWISE SPECIFIED.
4. LEAD COLORS ARE OPTIONAL. LEADS MUST ALWAYS BE NUMBERED AS SHOWN.

REV. DESC: REVISE TO SHOW OPTIONAL COLORS			
REV. LTR: D	BY: JLP	REVISED: 04/08/99 1:16	TDR: 0178636
CD0001		FILE: AAA00007405	MDL: –
		MTL: –	

BALDOR ELECTRIC Co.

TYPE L, DV, REV, 6 LEADS

CD0001