TECO Westinghouse MOTORS (CANADA) INC.	
	Date: November 30, 2016

Technical Documentation

PDH0606

Optim TEFC | AEHH8N

Date: November 30, 2016

TECO Westinghouse
MOTORS (CANADA) INC.

Date: November 30, 2016

Dimensional Drawing

Catalogue	Model	HP	Pole	kW	Rating	Voltage	Hz	RPM
PDH0606	AEHH8N	60	6	45	Continuous	230 / 460 V	60	1200

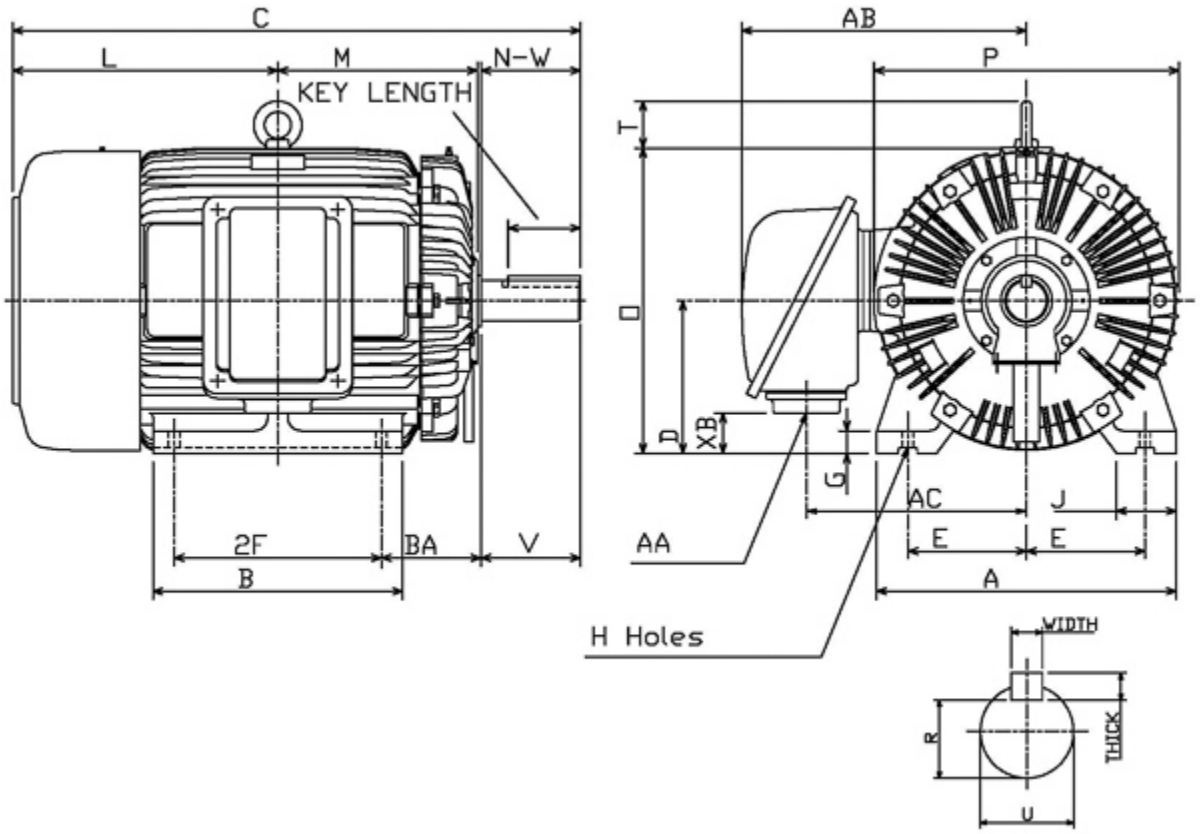

Frame Size	Mounting					A	B	C	CD	D
	E	2F	2F2	H	BA					
404T	8	12.25		0.81	6.62	19.7	15.15	36.3		10

G	J	K	L	M	O	P	T	Key			Keyseat
								Width	Thick	Length	R
1.55	3.95		16.3	12.52	20.04	20.08	2.76	0.75	0.75	5.65	2.45

Terminal Housing				Aux Box		C/D Flange					
AA	AB	AC	XB	AE	AX	BB	AH	AK	BD	AJ	BF
3 NPT	19.37	14.76	1.81								

Shaft Extension			Bearings		Approx. Weight Lbs	SPL dBA/3ft	Ins. Class	S.F.	Drive Method	Dimensions
N-W	U	V	DE	NDE						
7.25	2.875	7.15	6317	6313	1245	78	F	1.15	Direct Coupling / Belt Drive	Inches

TECO Westinghouse
MOTORS (CANADA) INC.

Date: November 30, 2016

Technical Data Sheet

Motor Type: AEHH8N	Catalogue No: PDH0606

Nameplate Information

HP	Pole	RPM	Frame	Voltage	Hz	Phase
60	6	1180	404T	230 / 460	60	3
Enclosure	Ins. Class	Service Factor	Time Rating	NEMA Design	Rated Amb.	Rated Altitude
TEFC	F	1.15	Continuous	B	-40 to 40 °C	<3300 ft

Typical Performance

Efficiency (%)				Power Factor (%)		
Full Load		3/4 Load	1/2 Load	Full Load	3/4 Load	1/2 Load
Nom.	Min.					
94.5	93.6	94.5	94.1	87.0	86.5	80.5

Torque				Current (A)		
Full Load (lb-ft)	Locked Rotor (% FLT)	Pull Up (% FLT)	Break Down (% FLT)	No Load	Full Load	Locked Rotor
267.00	200	185	245	36.2 / 18.1	136.6 / 68.3	870 / 435

NEMA KVA Code	Inertia (WR^2)			Safe Stall Time (s)		Noise Level Sound Press. dB(A)
	Rotor ($lb\text{-}ft^2$)	NEMA Load ($lb\text{-}ft^2$)	Max. Allowable ($lb\text{-}ft^2$)	Cold	Hot	
G	33.530	735.0	1828.0	34	24	78

VFD Duty Information

Speed Range			VFD		S.F.
Constant Torque	Variable Torque	Constant Power	Carrier	Type	
6-60Hz	3-60Hz	60-120Hz	≤ 5 kHz	VPWM or CPWM	1.0 Only

Additional Information

Bearings		Approx. Weight
DE	NDE	lbs
6317	6313	1245

Hazardous Locations Information

CSA Certified	
Class I, Div 2, Groups B, C & D Class I, Zone 2, Groups IIB+H2, IIB & IIA	
Temp Code (Sinewave / VFD)	T3C / T3

Connection Diagram

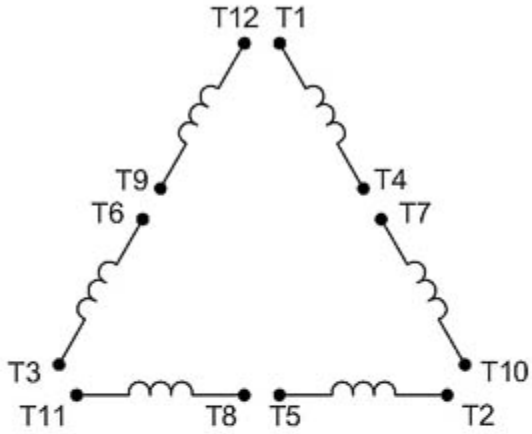

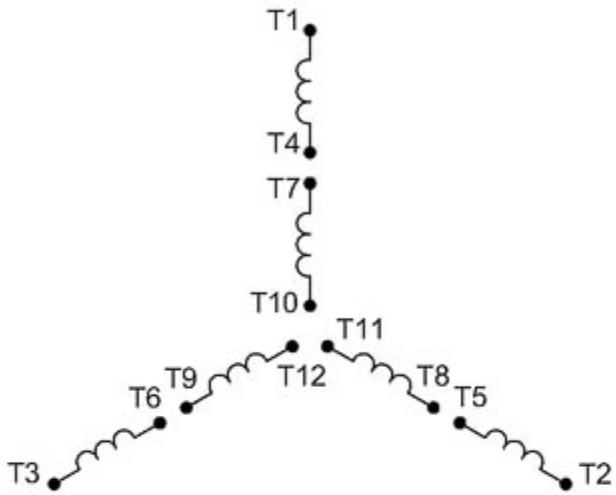

12 LEAD DUAL VOLTAGE WYE/DELTA						
VOLTAGE	CONNECTION		L1	L2	L3	JOIN
HIGH	START	WYE	1	2	3	4&7,5&8,6&9 10&11&12
	RUN	DELTA	1,12	2,10	3,11	4&7,5&8,6&9
LOW	START	2 WYE	1,7	2,8	3,9	4&5&6 10&11&12
	RUN	2 DELTA	1,6,7 12	2,4,8 10	3,5,9 11	

WD_12YD

TECO Westinghouse MOTORS (CANADA) INC.	
	Date: November 30, 2016

Thermal Limit Curves

Motor Type: AEHH8N		Catalogue No: PDH0606		Family: Optim TEFC	
HP	60	Safe Stall Time		Full Load A	136.6 / 68.3 A
Voltage	230 / 460V 60Hz	Hot	24 s	Locked Rotor A	637 / 637 %
RPM	1200	Cold	34 s	Locked Rotor A	870.0 / 435 A

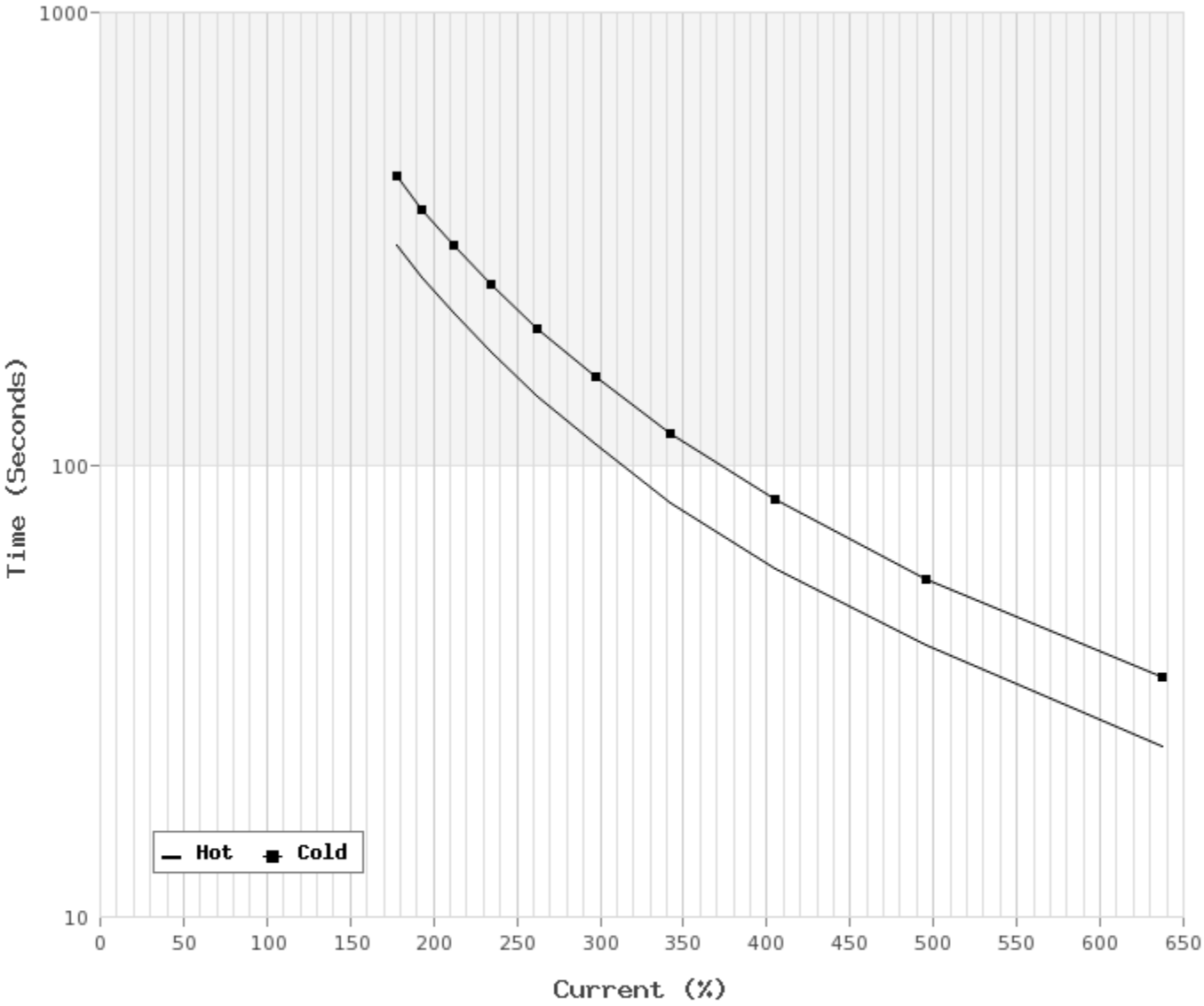

TECO Westinghouse
MOTORS (CANADA) INC.

Date: November 30, 2016

T-N and I-N Curves

Motor Type: AEHH8N	Catalogue No: PDH0606	Family: Optim TEFC
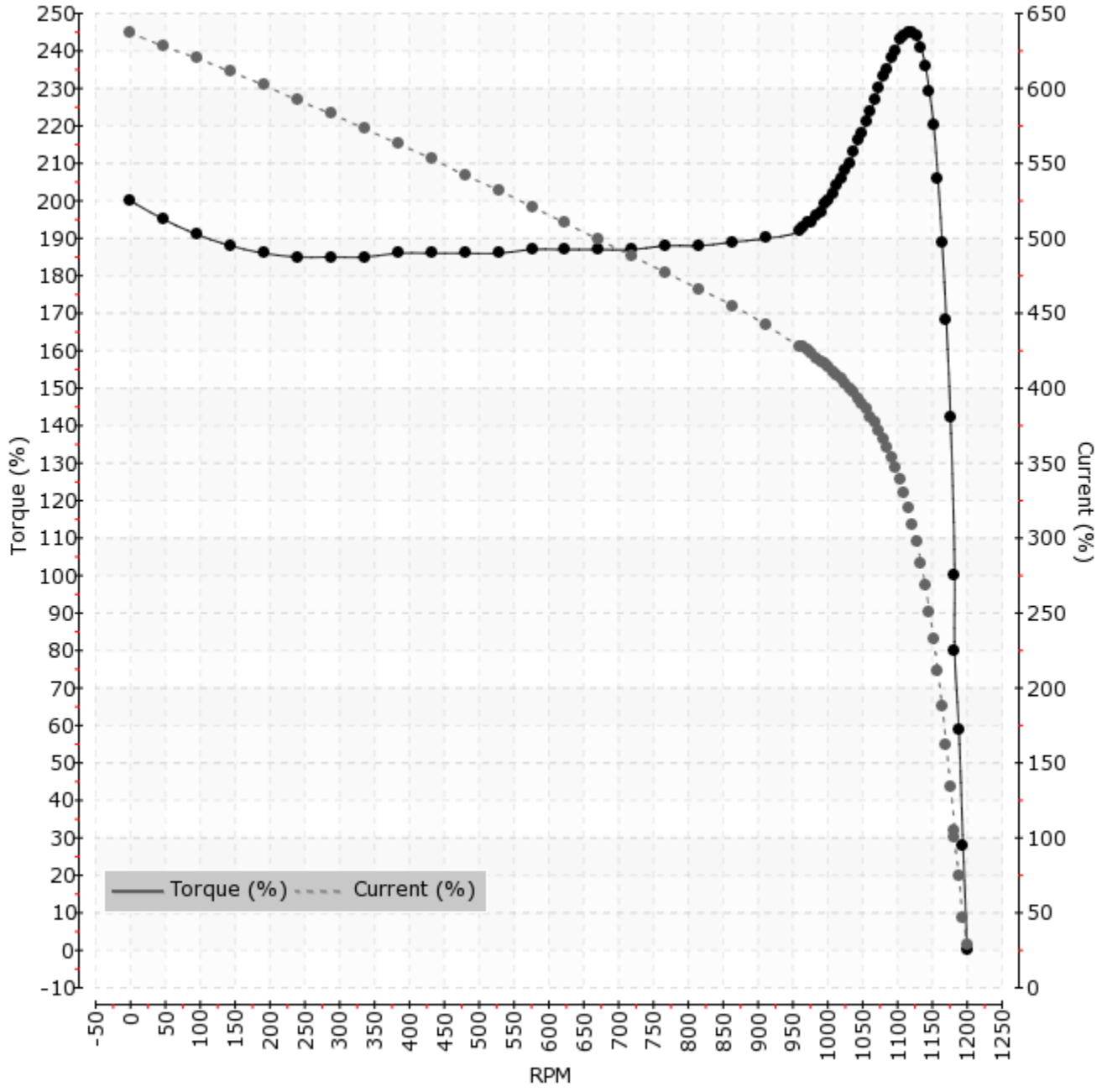
HP	60	Full Load T	267.00 lb-ft	Full Load A	136.6 / 68.3 A
Voltage	230 / 460V 60Hz	Locked Rotor T	200 %	Locked Rotor A	870.0 / 435.0 A
RPM	1200	Pull Up T	185 %	Break Down T	245 %