TECO Westinghouse MOTORS (CANADA) INC.	
	Date: December 1, 2016

Technical Documentation

XH12565R

Optim TEXP | AEHHXU

Date: December 1, 2016

TECO Westinghouse
MOTORS (CANADA) INC.

Date: December 1, 2016

Dimensional Drawing

Catalogue	Model	HP	Pole	kW	Rating	Voltage	Hz	RPM
XH12565R	AEHHXU	125	6	93	Continuous	575 V	60	1200

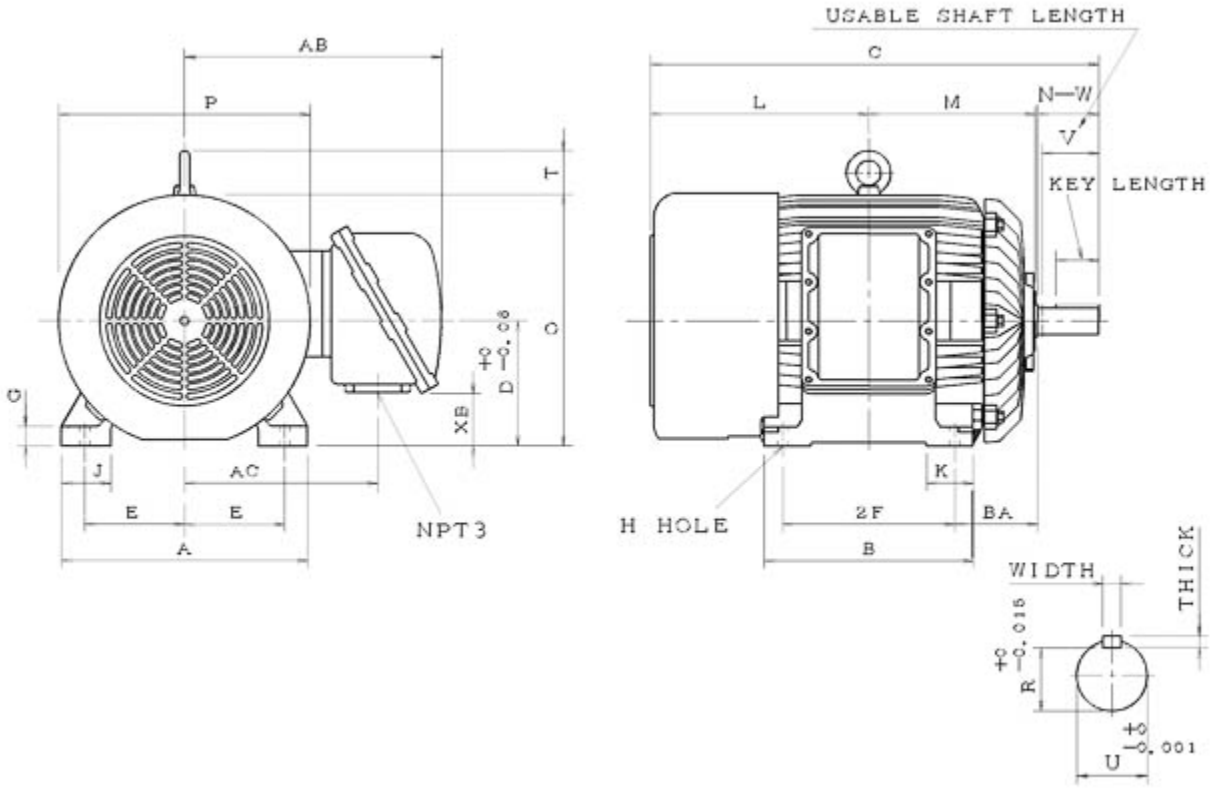

AEHHXU-HMP-2 1 0

Frame Size	Mounting					A	B	C	CD	D
	E	2F	2F2	H	BA					
445T	9	16.5		0.81	7.5	22.05	19.5	44.05		11

G	J	K	L	M	O	P	T	Key			Keyseat
								Width	Thick	Length	R
1.55	4.35	4.35	19.8	15.45	22.25	23.3	3.55	0.875	0.875	6.91	2.880

Terminal Housing				Aux Box		C/D Flange					
AA	AB	AC	XB	AE	AX	BB	AH	AK	BD	AJ	BF
NPT3"	21.65	16.6	5.1								

Shaft Extension			Bearings		Approx. Weight Lbs	SPL dBA/3ft	Ins. Class	S.F.	Drive Method	Dimensions
N-W	U	V	DE	NDE						
8.5	3.375	8	NU318	6318	1720	80.0	F	1.15	Belt Drive	Inches

TECO Westinghouse MOTORS (CANADA) INC.	
	Date: December 1, 2016

Technical Data Sheet

Motor Type: AEHHXU	Catalogue No: XH12565R

Nameplate Information

HP	Pole	RPM	Frame	Voltage	Hz	Phase
125	6	1181	445T	575	60	3
Enclosure	Ins. Class	Service Factor	Time Rating	NEMA Design	Rated Amb.	Rated Altitude
TEXP	F	1.15	Continuous	B	-40 to 40 °C	<3300 ft

Typical Performance

Efficiency (%)				Power Factor (%)		
Full Load		3/4 Load	1/2 Load	Full Load	3/4 Load	1/2 Load
Nom.	Min.					
95.0	94.1	94.5	93.6	84.0	81.5	75.0

Torque				Current (A)		
Full Load (lb-ft)	Locked Rotor (% FLT)	Pull Up (% FLT)	Break Down (% FLT)	No Load	Full Load	Locked Rotor
555.7	130.0	104.0	210.0	47.8	117.3	726

NEMA KVA Code	Inertia (WR^2)			Safe Stall Time (s)		Noise Level Sound Press. dB(A)
	Rotor ($lb\text{-}ft^2$)	NEMA Load ($lb\text{-}ft^2$)	Max. Allowable ($lb\text{-}ft^2$)	Cold	Hot	
G	73.0	1452.0	3132.0	38.0	15.0	80.0

VFD Duty Information

Speed Range			VFD		S.F.
Constant Torque	Variable Torque	Constant Power	Carrier	Type	
6-60Hz	3-60Hz	60-90Hz	≤ 5 kHz	VPWM or CPWM	1.0 Only

Additional Information

Bearings		Approx. Weight
DE	NDE	lbs
NU318	6318	1720

Hazardous Locations Information

CSA/UL Certified	
Class I, Div 1, Groups D; Class II, Div 1, Groups E, F & G Class I, Zone 1, Groups IIA; Class II, Div 1, Groups E, F & G	
Temp Code (Sinewave / VFD)	T3B / T3B

Connection Diagram

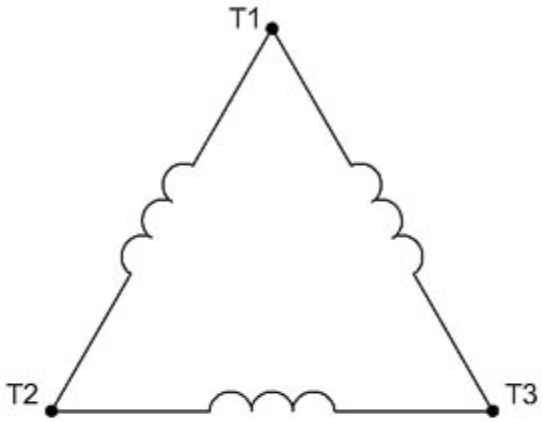

3 LEAD SINGLE VOLTAGE DELTA					
VOLTAGE	CONN.	L1	L2	L3	
-	DELTA	1	2	3	

WD_3D